LEPCOS (North-West Laboratory)
http://ferrite.ru Tel/fax +7-812-369-11-54
St-Petesburg, Russia

REVISIONS

REV	SYM	DRAFTER	CHECKER	DATE
8		Y.G.HSU	S.M.SHIH	02/06/07
9		Y.G.HSU	S.M.SHIH	02/26/07
10		S.Y.TANG	G.F.YANG	04/01/08

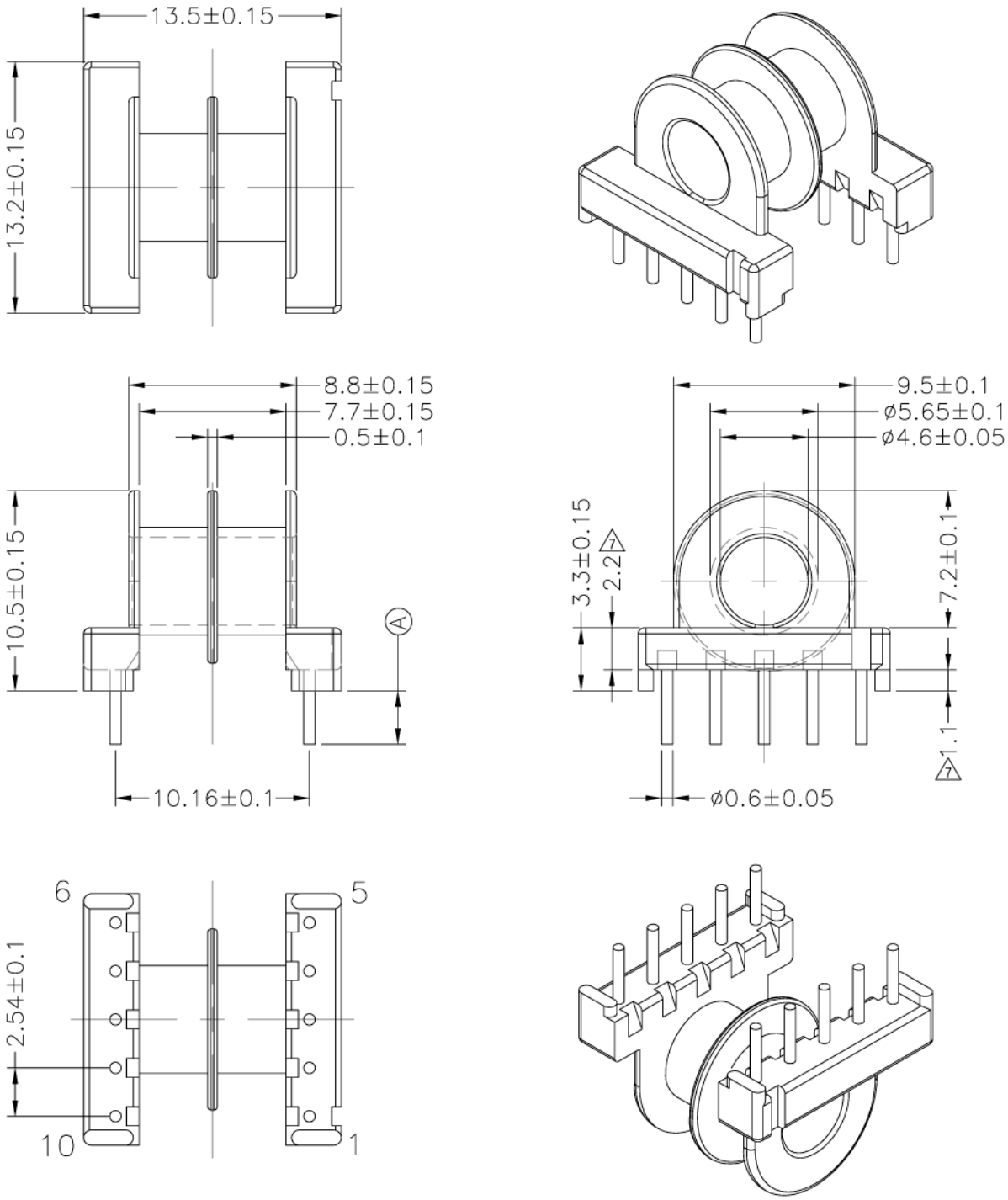

DWG NO.	Bobbin EP13 2 sec 10 pin E-039-1				
PART NO.	MATERIAL (BOBBIN)	MATERIAL (TERMINAL)	TERMINAL (PLATING)	PIN ALLOCATION	NOTE
E-039-1	PM-9630	C.P WIRE	Sn	ALL PIN Ⓐ=2.8±0.2	52-EP1310I20
					52-EP1310I21

TOLERANCE: .X±0.15 .XX±0.10 .XXX±0.05 UNIT : m / m SCALE 3 : 1

Finish:
1. Pb wire Immersion Sn on terminal : Thickness:Sn plating,100,5 μm (200 μ inches) min,Base nickel 0.625 μm (25 μ inches) min.
2. CP wire Immersion Sn on terminal : Thickness:Sn plating,100,5 μm (200 μ inches) min.
3. Coplanarity deviation: 0.10 mm (0.004 inches)max.

REV 10