LEPCOS (North-West Laboratory)

http://ferrite.ru Tel/fax +7-812-369-11-54

REVISIONS				
REV	SYM	DRAFTER	CHECKER	DATE
3		T.S.LII	W.H.HSU	06/02/03
4		T.S.LII	W.H.HSU	07/24/06
5		S.Y.TANG	W.H.HSU	04/23/07

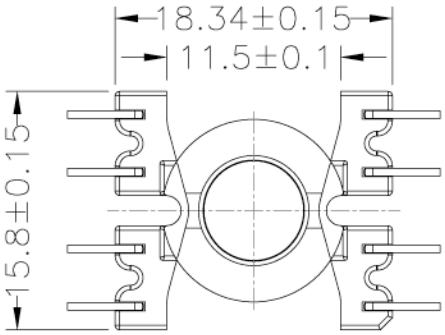

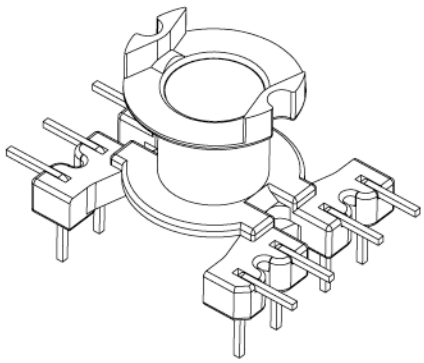

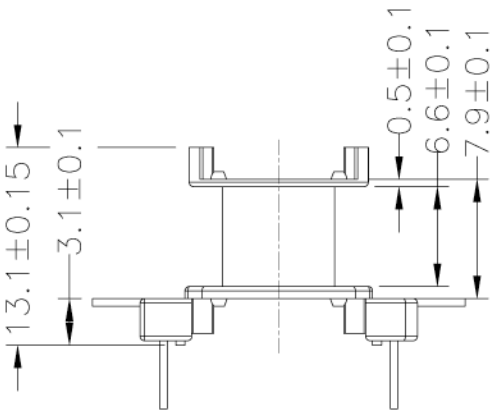

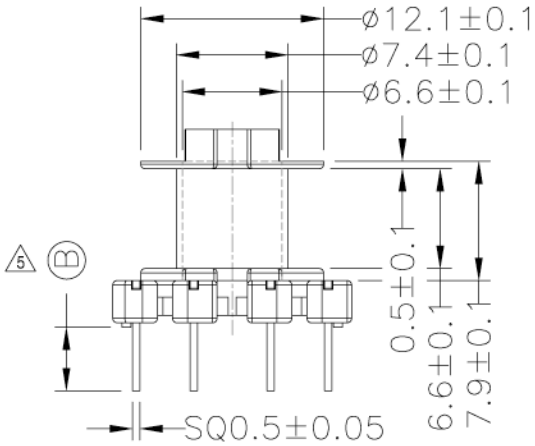

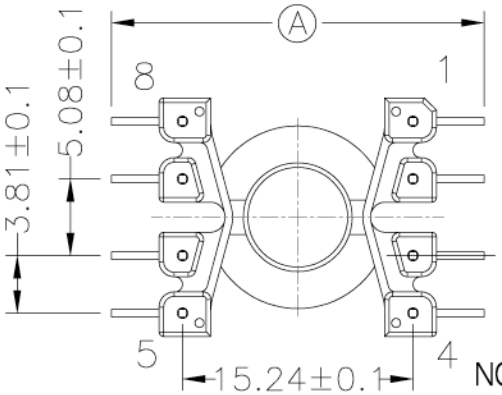

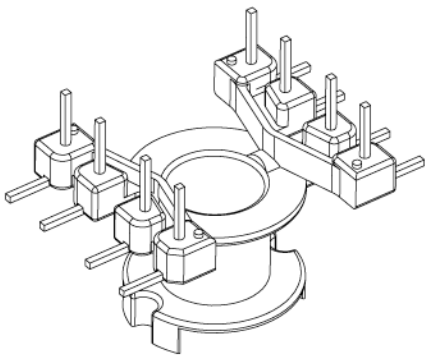

NOTE:

1. PM9630 from SUMITOMO BAKELITE CO. UL file no. E41429.
2. this part is RoHS compliant.

DWG NO.	Bobbin Rm6 1sec 8pin E-045-2				
PART NO.	MATERIAL (BOBBIN)	MATERIAL (TERMINAL)	TERMINAL (PLATING)	PIN ALLOCATION	NOTE
E-045-2	PM-9630	CP WIRE	Sn	ALL PIN A=22.5±0.3 B=4.2±0.3	

TOLERANCE: .X±0.15 .XX±0.10 .XXX±0.05

UNIT : m / m

SCALE 1 : 1

Finish:
1. PB wire Immersion Sn on terminal : Thickness:Sn plating,100,5 μm (200 μ inches) min,Base nickel 0.625 μm (25 μ inches) min.
2. CP wire Immersion Sn on terminal : Thickness:Sn plating,100,5 μm (200 μ inches) min.
3. Coplanarity deviation: 0.10 mm (0.004 inches)max.

REV 5