LEPCOS (North-West Laboratory)

http://ferrite.ru Tel/fax +7-812-369-11-54
St-Petesburg, Russia

REVISIONS				
REV	SYM	DRAFTER	CHECKER	DATE
1		T.S.LII	W.H.HSU	06/28/04
2		T.S.LII	W.H.HSU	07/25/06
3		S.Y.TANG	G.F.YANG	06/12/08

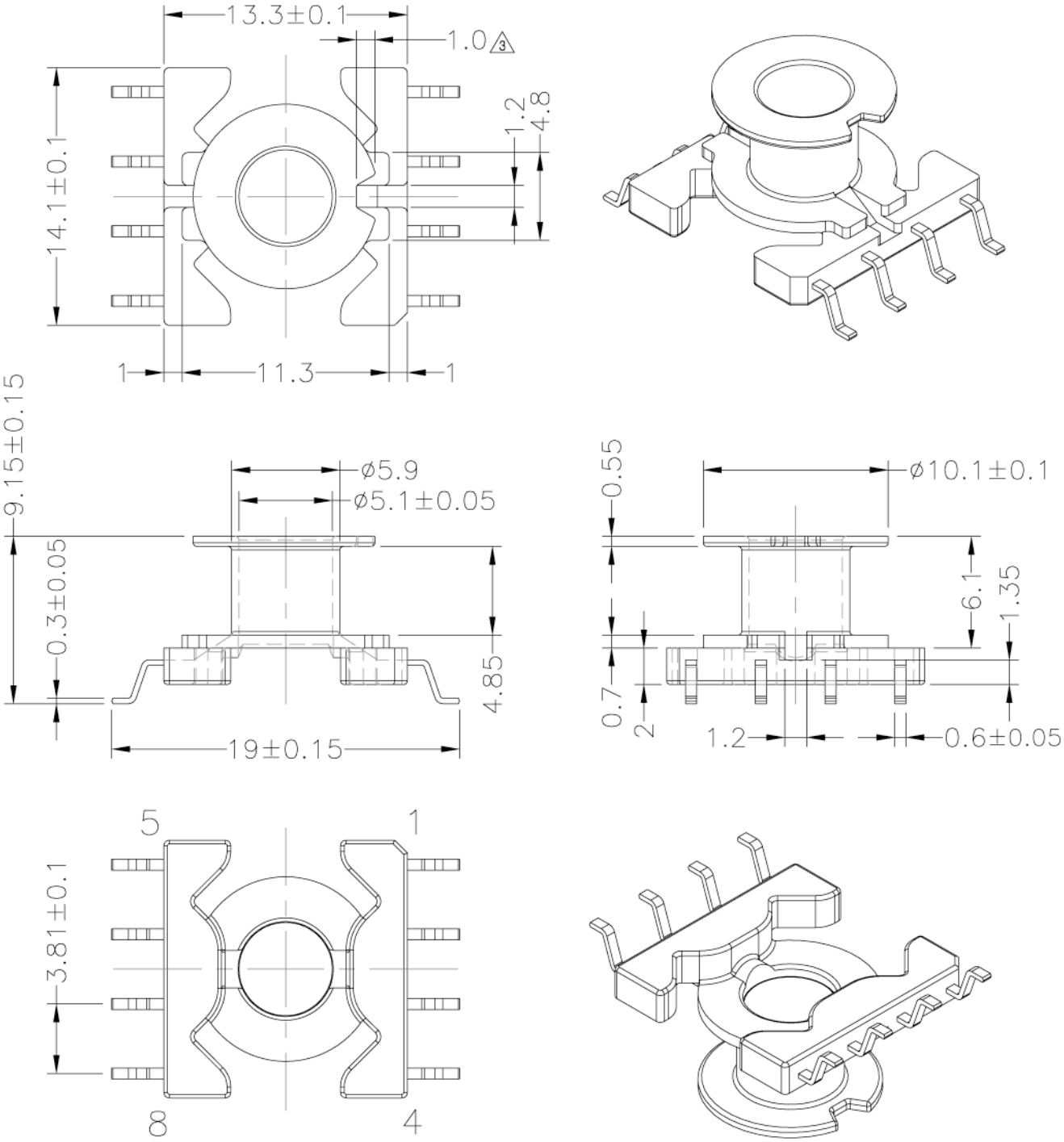

DWG NO.	RM5-8P-GW-3.81-C-1				
PART NO.	MATERIAL (BOBBIN)	MATERIAL (TERMINAL)	TERMINAL (PLATING)	PIN ALLOCATION	NOTE
TBI-108-03031.103	PM-9630	P.B	Sn	ALL PIN	

TOLERANCE: .X±0.15 .XX±0.10 .XXX±0.05

UNIT : m / m

SCALE 3 : 1

Finish:
1. Immersion gold on terminal : Thickness gold 0.075 μm (3 μ inches) min,Base nickel 0.625 μm (25 μ inches) min.
2. Immersion Sn on terminal : Terminal:Sn plating,100, 5 μm (200 μ inches) min , Base nickel 0.625 μm (25 μ inches) min.
3. Coplanarity deviation: 0.10 mm (0.004 inches)max.

REV 3