CORE SETS

Effective core parameters

SYMBOL	PARAMETER	VALUE	UNIT
Σ(1/A)	core factor(C_1)	1.31	mm^{-1}
Ve	effective volume	2758.59	mm^3
le	effective length	60.10	mm
Ae	effective area	45.90	mm^2
Wt	mass of core	≈15.1	g

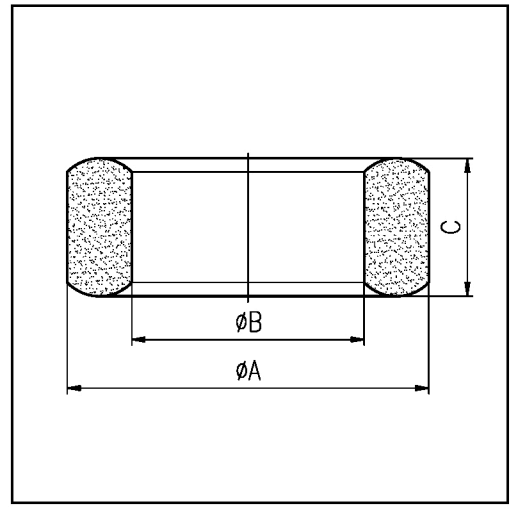

尺寸 / Coat	A	B	C
Uncoat	25.0±0.4	15.0±0.4	10.0±0.3
Coated	25.8max	14.3min	10.7max

Note: With grass green epoxy coating

GRADE	AL(nH/N^2)	μi
	f=10kHz U=0.25V	f=10kHz U=0.25V
DMR7M	800±25%	≈750

DMR7M Material Characteristics

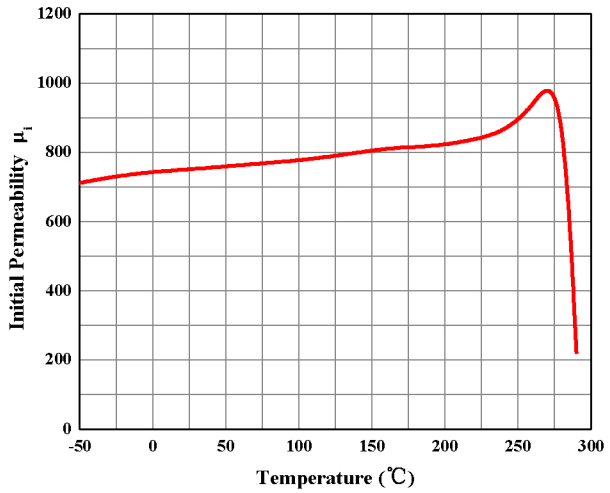

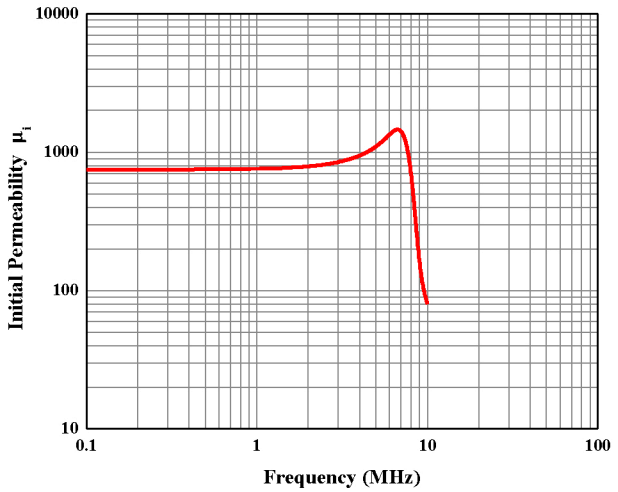

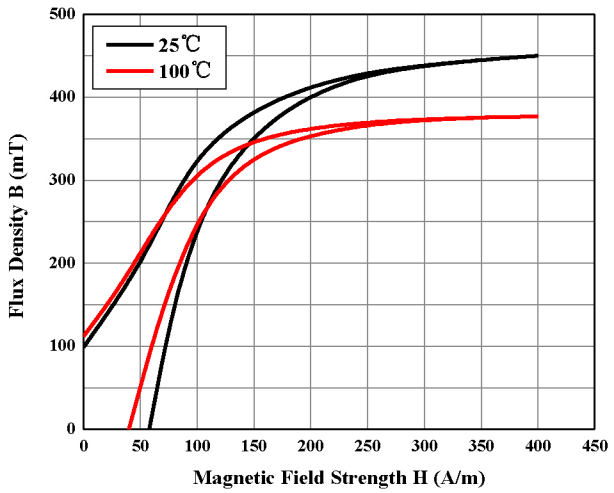

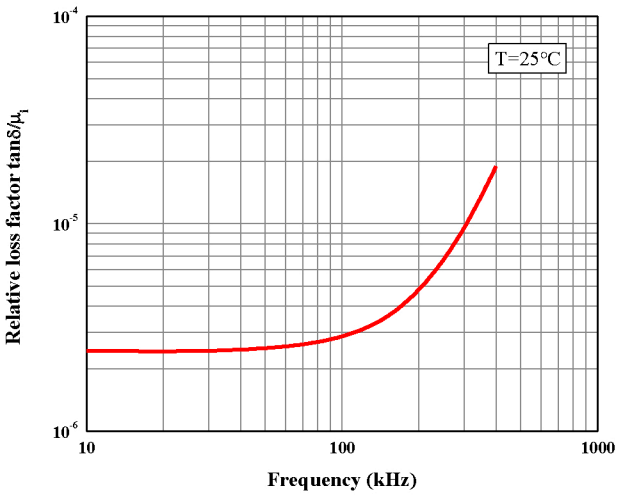

CHARACTERISTICS	CONDITIONS		VALUE
Initial Permeability μ_i	f=10kHz, B<0.25mT	25°C	750±25%
Saturation Magnetic Flux Density Bs (mT)	50Hz, 1194A/m	25°C	400
		100°C	310
Relative Loss Factor $\tan\delta/\mu_i$ ($\times 10^{-6}$)	200kHz, B<0.25mT	25°C	≤12
	1MHz, B<0.25mT	25°C	≤20
Relative Temperature Coefficient $\alpha_{\mu r}$ ($\times 10^{-6}$/°C)	10kHz, B<0.25mT	5°C~25°C	0.25~2.6
		25°C~55°C	0.25~2.6
η_B ($\times 10^{-6}$/mT) Hysteresis Material Constant	10kHz, 1.5~3mT	25°C	< 0.18
Tc (°C) Curie Temperature	f=10kHz, B<0.25mT		>200