LEPCOS (North-West Laboratory)
www.ferrite.ru Tel/Fax +7-812-369-11-54
St-Petersburg, Russia

REVISIONS

| REV | SYM | DRAFTER | CHECKER | DATE |
|---|---|---|---|---|
| 1 | | T.S.LII | W.H.HSU | 06/06/05 |
| 2 | | T.S.LII | W.H.HSU | 07/25/06 |
| 3 | | T.S.LII | W.H.HSU | 07/26/06 |

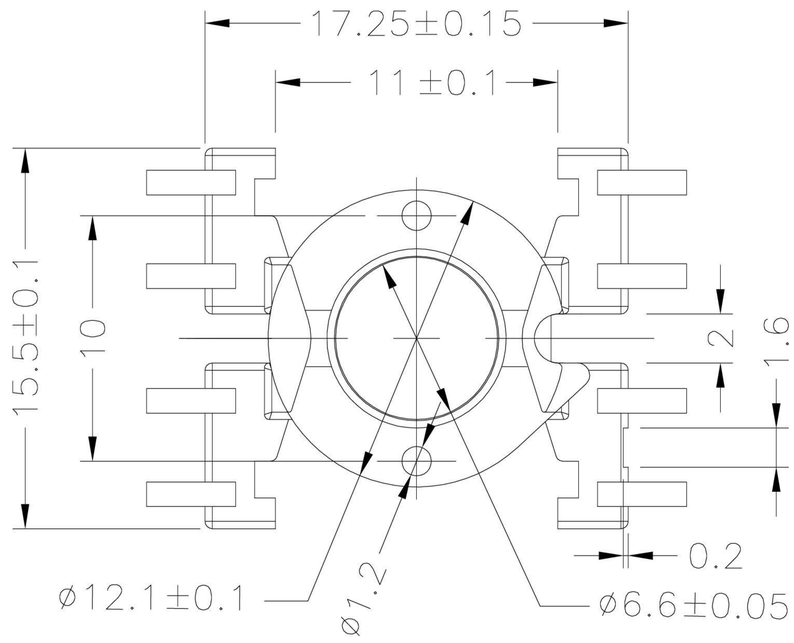


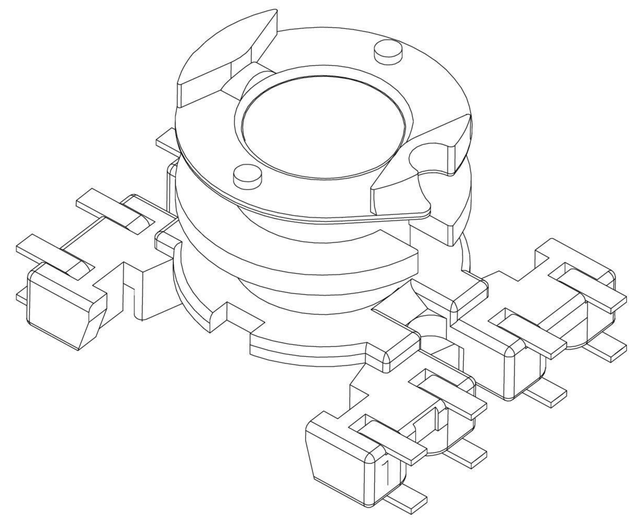

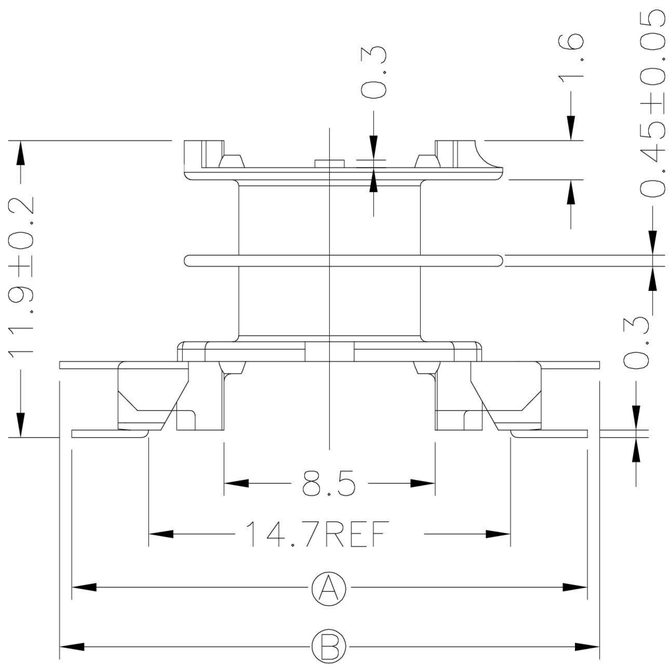


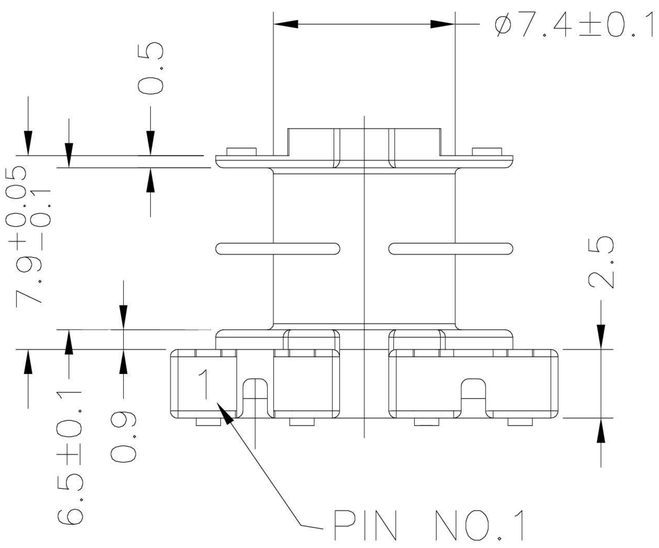


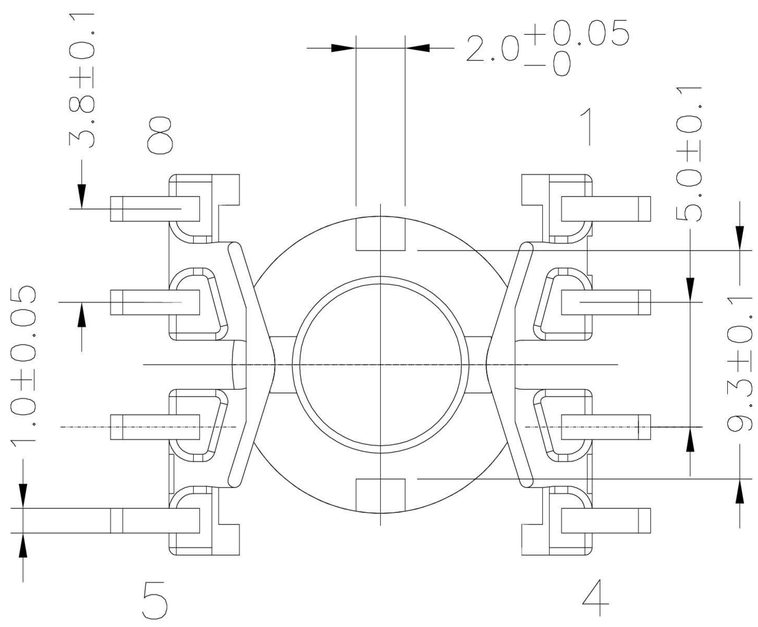


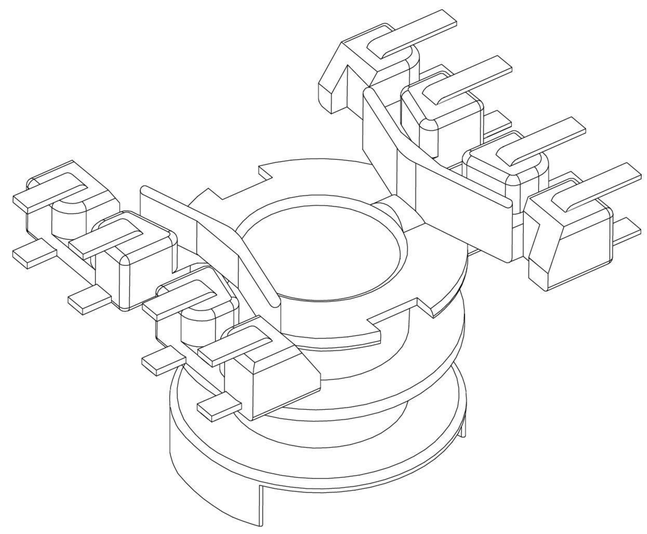

| DWG NO. | RM6-8P-J-3.8-B-1-2S | | | | |
|---|---|---|---|---|---|
| PART NO. | MATERIAL (BOBBIN) | MATERIAL (TERMINAL) | TERMINAL (PLATING) | PIN ALLOCATION | NOTE |
| TBI-108-02022.106 | PM-9630 | CP WIRE | Sn | ALL PIN A =21±0.5 B =21±0.5 | |
| TBI-108-02022.116 | PM-9630 | CP WIRE | Sn | ALL PIN A =18±0.5 B =21±0.5 | |
| TBI-108-02022.126 | PM-9630 | CP WIRE | Sn | ALL PIN A =21.9±0.3 B =21.9±0.3 | 3 |
| | | | | | |
| | | | | | |
| | | | | | |
| | TOLERANCE: .X±0.15 .XX±0.10 .XXX±0.05 | | | UNIT : m / m | SCALE 2 : 1 |

Finish:
1. Immersion gold on terminal : Thickness gold 0.075 μm (3 μ inches) min,Base nickel 0.625 μm (25 μ inches) min.
2. Immersion Sn on terminal : Terminal:Sn plating,100, 5 μm (200 μ inches) min , Base nickel 0.625 μm (25 μ inches) min.
3. Coplanarity deviation: 0.10 mm (0.004 inches )max.

REV 3