LEPCOS (North-West Laboratory)
http://ferrite.ru Tel/fax +7-812-369-11-54
St-Petersburg, Russia

REVISIONS				
REV	SYM	DRAFTER	CHECKER	DATE
1		T.S.LII	W.H.HSU	12/14/01
2				
3				

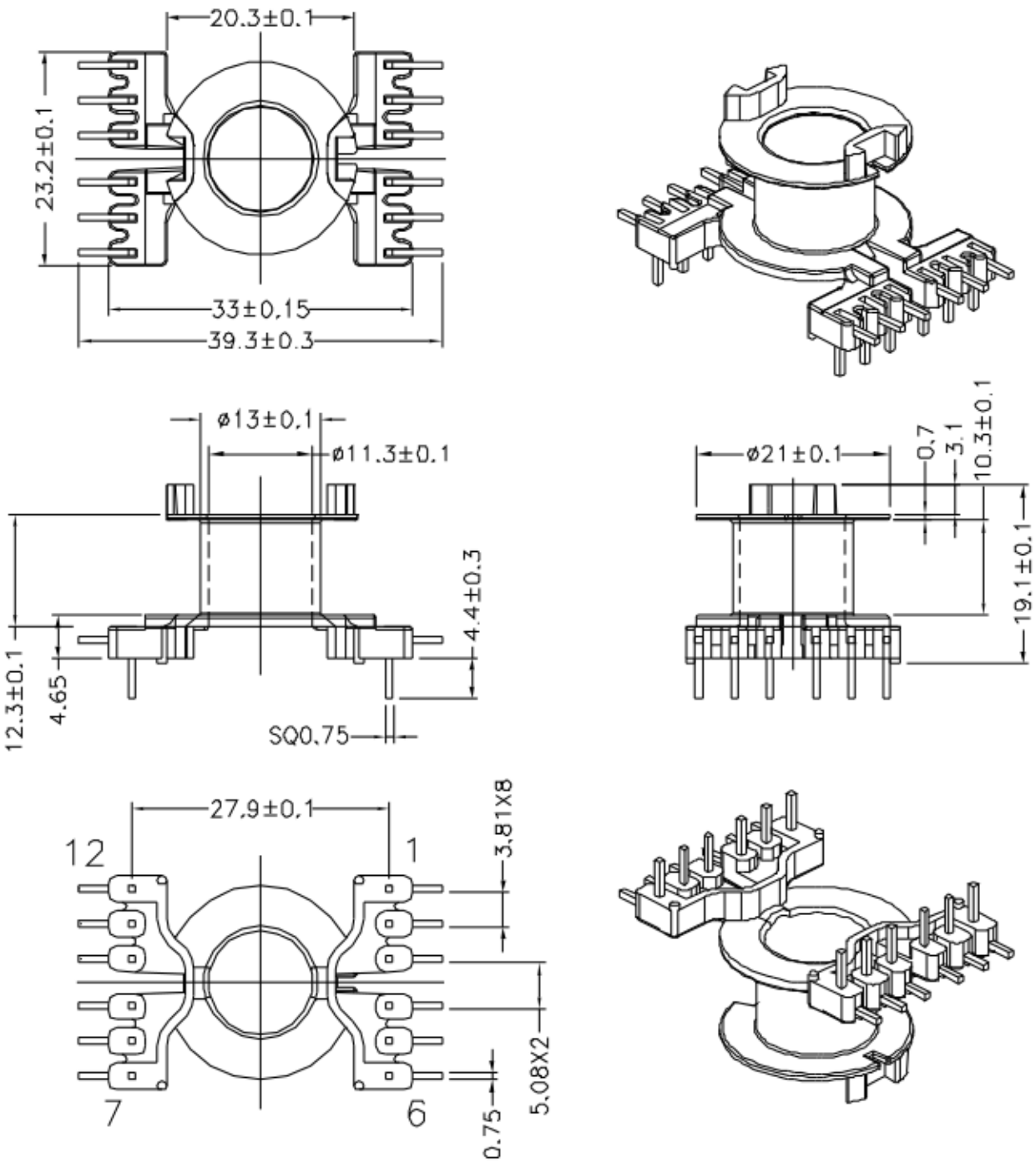

PART NO.	RM10-12P-TH-L-3.81-A-1						
DWG NO.	A - 028						
TBI NO.	MATERIAL (BOBBIN)	MATERIAL (TERMINAL)	TERMINAL (PLATING)			.101	ALL PIN
208-04011.1XX	PM-9630	C.P. WIRE	SnPb	PART NO.	REV	MODE NO	PIN LOCATION

Finish

Immersion gold on terminal.
Thickness gold 0.075 um min.
Base nickel 0.825 um min.

TOLERANCE	X± / XX±
UNIT	m / m
SCALE	3 : 2
REV	1