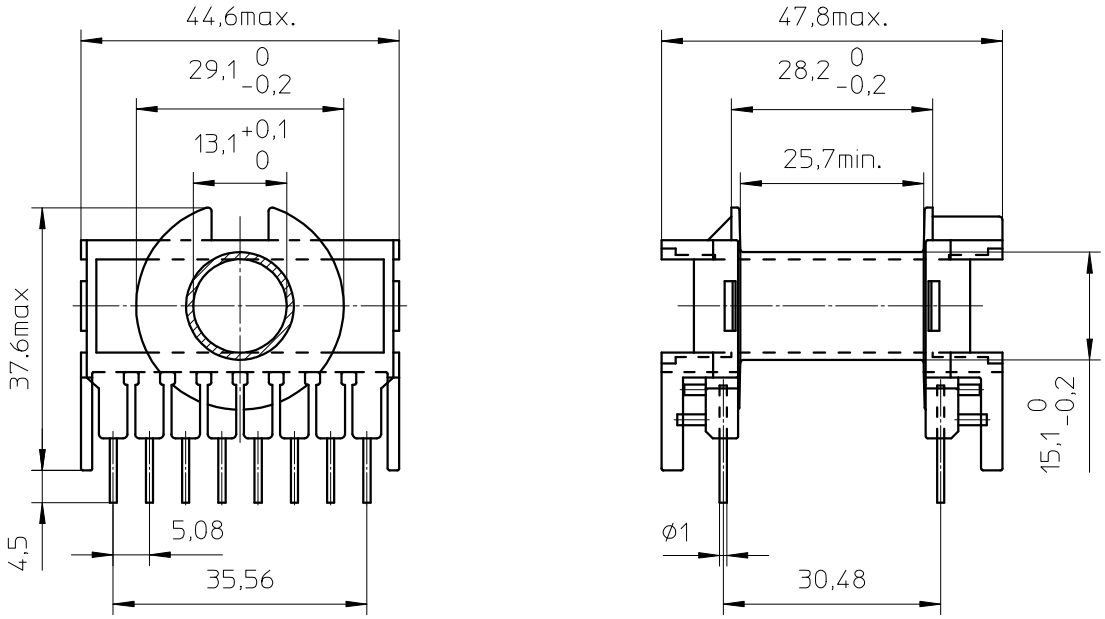

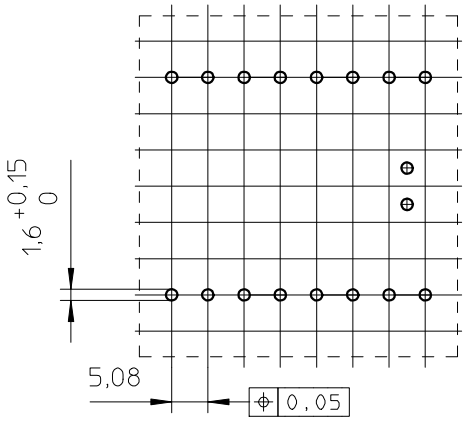

Coil former material:	Valox 420SEO (PBT), glass-reinforced.
	UL file number: E45329(R) - UL94V-0.
Pin material:	CuSn - Ni flash, Sn plated.
Max. operating temp.:	acc. to IEC 60 085 class F, 155°C.
Resistance to soldering heat:	acc. to IEC 60 068-2-20 Part 2, Test Tb, method 1B, 350°C-3,5s.
Solderability:	acc. to IEC 60 068-2-20 Part 2, Test Ta, method 1, 235°C-2s.
Min. winding area:	177 mm^2.
Mean length of turn:	69 mm.

CLASS.NO.	CPH-ETD39-1S-16P	4322 021 33862					~~90-10-08~~ ~~99-10-06~~ ~~00-05-17~~ 05-09-01
00-05-17							
NAME NAAM J.Willems	SUPERS. VERV.	1	SH BL. SH BL. 112	– 001	010		A4
MPA	CHECK CONTR.	DAT. 83-02-08	Property of Eigendom van	© FERROXCUBE 2000			