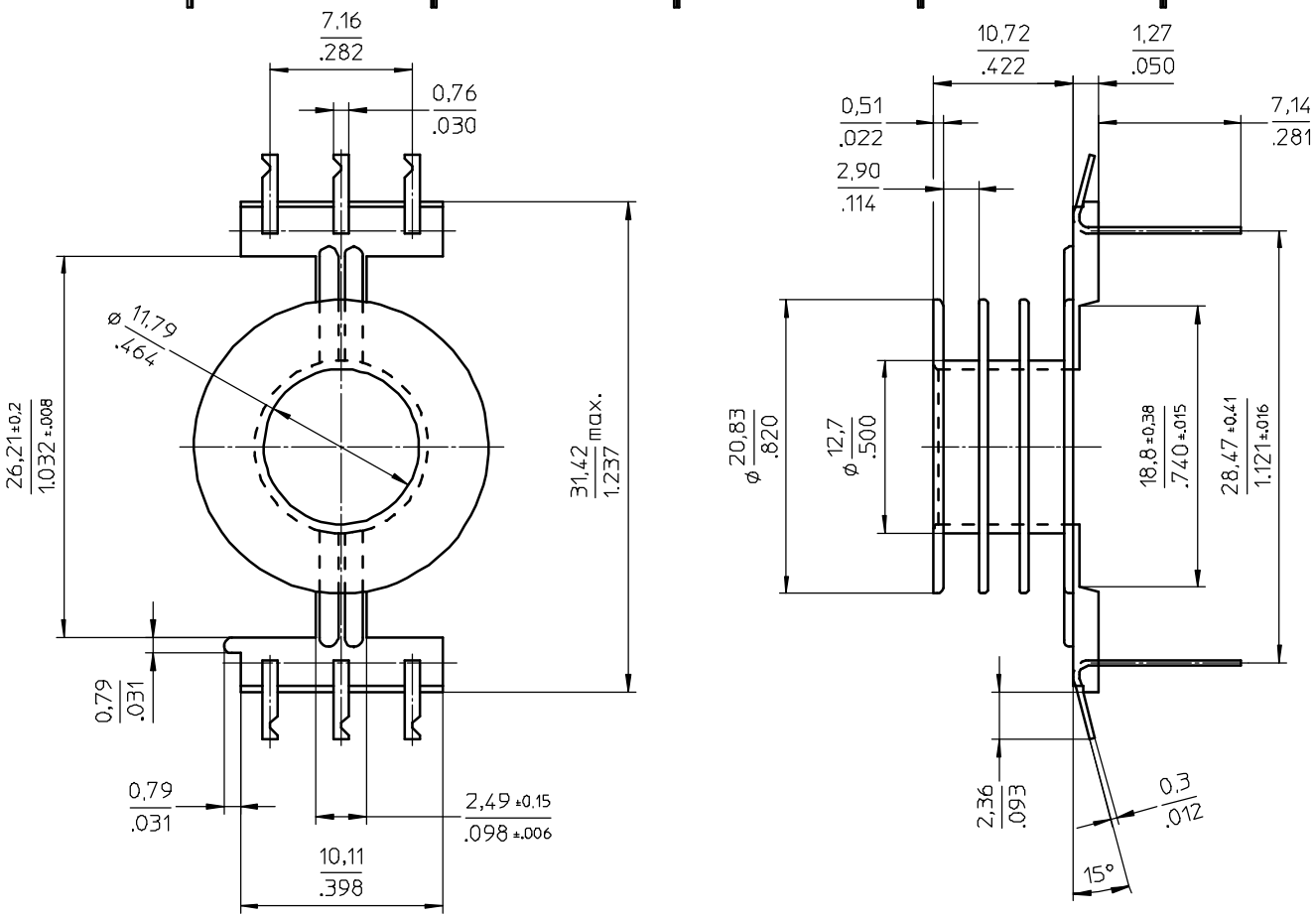

Grid pattern

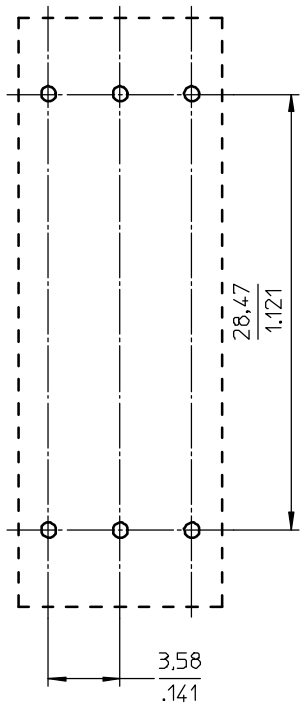

Coil former material:	Zytel FR50 (PA6.6), glass-reinforced. UL file number: E41938 - UL94V-0.
max. operating temp.	130°C, class B
pin material:	CuZn, Sn plated.
solderability:	acc. to IEC 60 068-2-20 part2, Test Ta, method 1, 235°C-2s.
mean length of turn:	2.070 inch (52,7 mm)
winding area:	1.217 sq. inch (30,9mm^2)

CLASS,NO.	CPV-P26/16-3S-6PDL-Z	4335 060 26631	05-09-26
NAME NAAM Veekens	SUPERS. VERY.	SH BL. SH BL. 112 – 001	A3
MPA CHECK CONTR.	DAT. 05-09-26	Property of Eigendom van	© FERROXCUBE 2000