LEPCOS (North-West Laboratory)
http://ferrite.ru Tel/fax +7-812-369-11-54
St-Petesburg, Russia

REVISIONS

REV	SYM	DRAFTER	CHECKER	DATE
1		T.S.LII	W.H.HSU	05/12/03
2		T.S.LII	W.H.HSU	07/24/06
3		T.S.LII	W.H.HSU	05/16/07

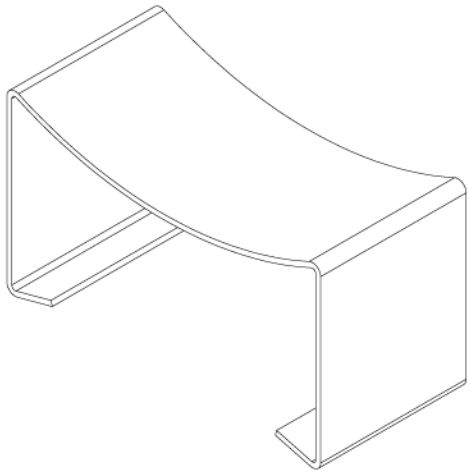

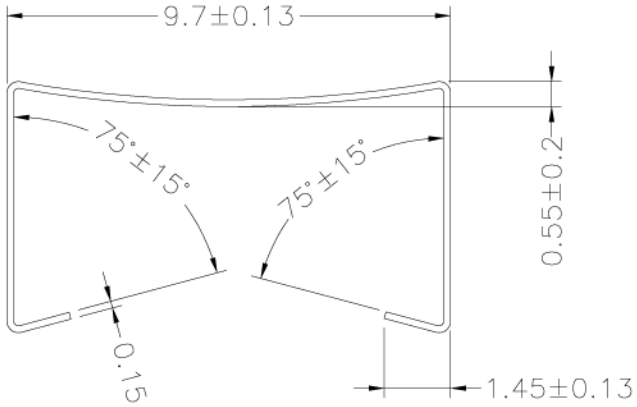

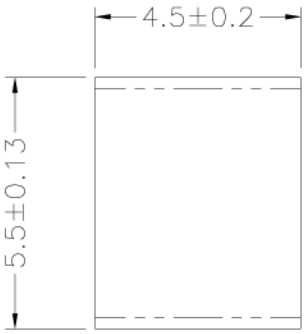

DWG NO.	ER9.5/5 clamp E-008C				
PART NO.	MATERIAL (CLIP)	MATERIAL (TERMINAL)	TERMINAL (PLATING)	PIN ALLOCATION	NOTE
E-008C		SUS 301			

TOLERANCE: .X±0.15 .XX±0.10 .XXX±0.05

UNIT : m / m

SCALE 6 : 1

Finish:
1. Pb wire Immersion Sn on terminal : Thickness:Sn plating,100,5 μm (200 μ inches) min,Base nickel 0.625 μm (25 μ inches) min.
2. CP wire Immersion Sn on terminal : Thickness:Sn plating,100,5 μm (200 μ inches) min.
3. Coplanarity deviation: 0.10 mm (0.004 inches)max.

REV 3